Simplification of Boolean Functions using Boolean Algebra and Universal gates

Submitted by:

Name	ID
Nawaf Alabdi	B00093759
Ali Abdelatief	B00099836

Submitted to:

Ms. Salsabeel Shapsough

Lab Instructor

American University of Sharjah

College of Engineering

Submitted on:

29/9/2024

Abstract

In this lab we will be using the breadboard to model logic circuits, using the different IC chips, wiring, and LEDs as outputs. Before finishing our implementation, we will be using different theorems of Boolean algebra and DeMorgan's laws to simplify our expressions, which we verify the equivalency using truth tables, such that our design uses the least number of gates possible which reduces production and energy costs. Furthermore, we will be implementing functions and re-designing existing circuits using only universal gates NAND and NOR.

Introduction

In this lab experiment, we will be given Boolean functions that we have to simplify as much as possible, by reducing the number of logic gates used and the number of IC circuits used. Afterwards, we will have to simulate them using LogiSim and implement them on a breadboard. We must ensure that the simplified circuit produces the same output for the same given inputs compared to the original Boolean function. Additionally, we will figure out the Boolean expression of a function by extracting the Sum of Minterms (SOM) from the truth table. We will then simplify, simulate and implement the circuit. Finally, we will work on a given Boolean expression and create an equivalent circuit once using only NOR gates, and once using only NAND gates, then we will simulate and implement them as well.

Theoretical Background

In many cases, Boolean expressions do not come in the simplest form. Like algebraic expressions, Boolean functions often can be reduced to use minimal number of binary operations and variables, which are directly reflected in our circuit design. To reduce Boolean expressions, we make use of axioms and theorems of Boolean algebra.

Basic theorems of Boolean algebra:

1)	$x + 0 = x$	$x . 1 = x$
2)	$x + 1 = 1$	$x . 0 = 0$
3)	$x + x = x$	$x . x = x$
4)	$(x')' = x$	
5)	$x + x' = 1$	$x . x' = 0$
6)	$x + y = y + x$ (commutative property)	$x . y = y . x$ (commutative property)
7)	$x + (y + z) = (x + y) + z$ (associative property)	$x . (y . z) = (x . y) . z$ (associative property)
8)	$x . (y + z) = x . y + x . z$ (distributive property)	$x + (y . z) = (x + y) . (x + z)$ (distributive property)

Simplification theorems:

9)	$x . y + x . y' = x$	$(x + y) . (x + y') = x$
10)	$x + x . y = x$	$x . (x + y) = x$
11)	$(x + y') . y = x . y$	$(x . y') + y = x + y$

Consensus theorem:

12.a)	$(x + y) . (x' + z) . (y + z) = (x + y) . (x' + z)$
12.b)	$x . y + x' . z + y . z = x . y + x' . z$

Figure 1 Axioms & Theorems of Boolean algebra

Known as universal gates, the NAND and NOR (NOT-AND and NOT-OR respectively) operators are unique in that they can build entire circuits using only one of either of these types of gates. By changing the sequence of universal gates and their wiring, we can build

AND, OR, and NOT operations, thereby enabling these gates to perform three functions in one gate.

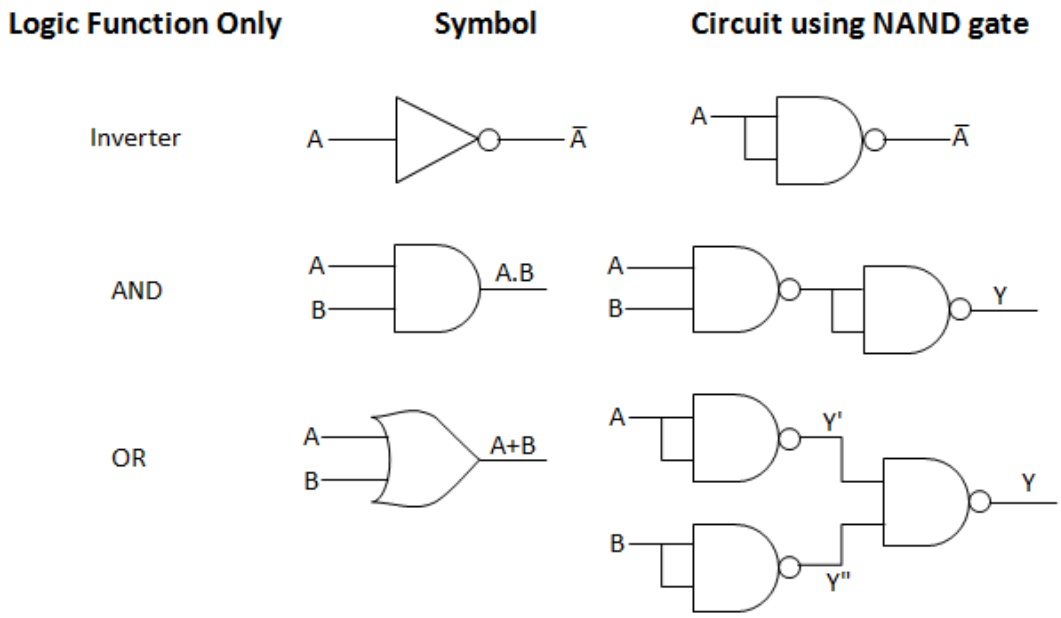

Figure 2 NAND circuits that correspond to the three basic logic functions (https://ittimepass.files.wordpress.com/2017/02/universal.png?w=608&h=370&crop=1)

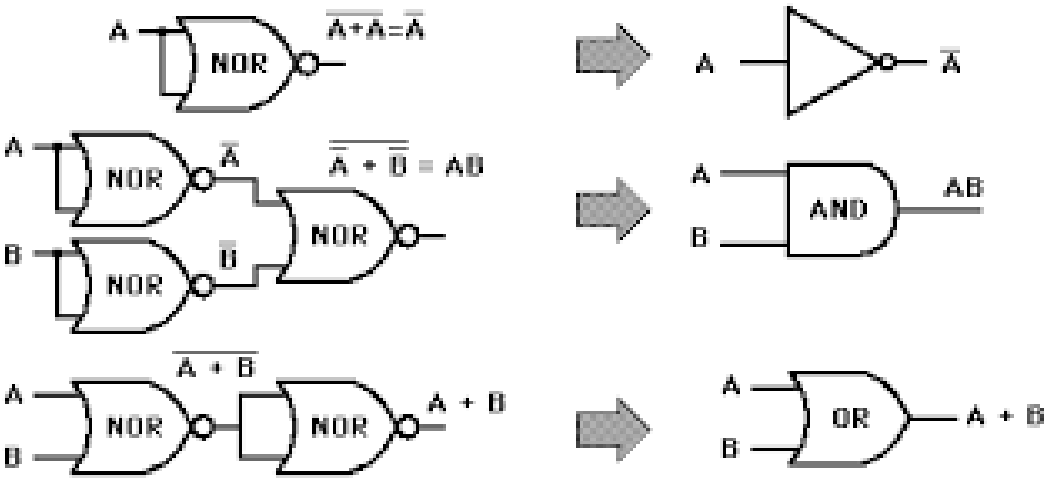

Figure 3 NOR circuits that correspond to the three basic logic functions (https://lh5.googleusercontent.com/proxy/9RGxk-W9j0YcTFKEDVKsF67XuLmguf9Q_Sdp_W_YS87V3ng87eetyztYmjz1OJypi4bC6wjlBNmBFoqRqkwcWnLd9cg4j4P1D9rhRDok3MRbfl40Z-EXyQ)

Experimental work, Results and Discussion

Lab Activities:

1. Simplify the expression and demonstrate the following:

$$B+A.\left[D+C.\left(\overline{A}.B+\overline{C}\right)\right]$$

$= B + A[D + C\bar{A}B + C\bar{C}]$

$= B + A\,[D + C\bar{A}B]$

$= B + AD + C\bar{A}AB$

$= B + AD$

a. Build the Truth Table.

A	B	C	D	F(A,B,C,D)
0	0	0	0	0
0	0	0	1	0
0	0	1	0	0
0	0	1	1	0
0	1	0	0	1
0	1	0	1	1
0	1	1	0	1
0	1	1	1	1
1	0	0	0	0
1	0	0	1	1
1	0	1	0	0
1	0	1	1	1
1	1	0	0	1
1	1	0	1	1
1	1	1	0	1
1	1	1	1	1

b. Simulate the simplified equation circuit (show the IC pins numbers on your drawing).

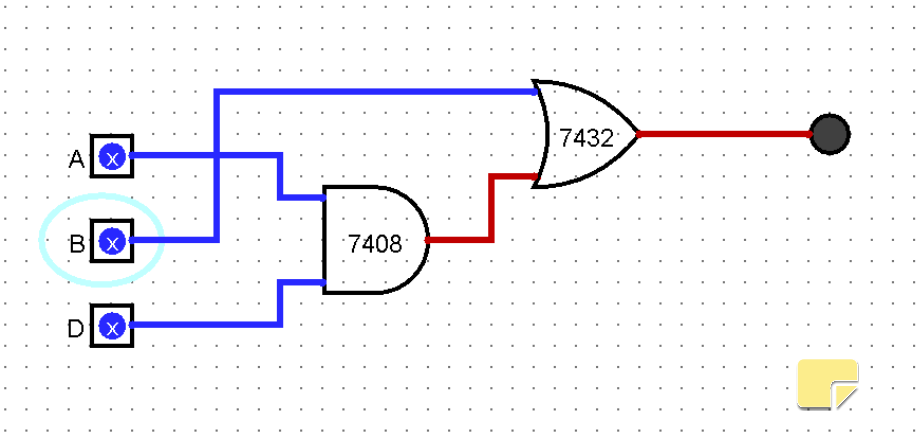

c. Implement the circuit and verify your implementation from the truth table.

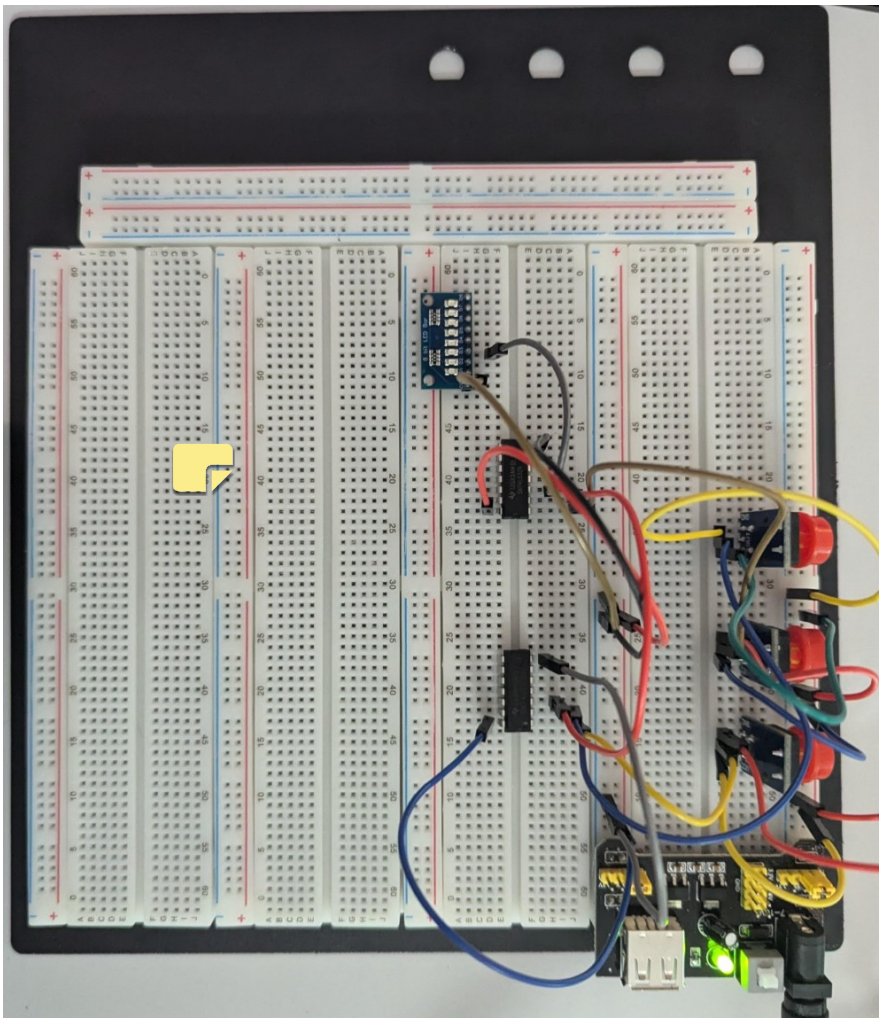

d. Compare the number of gates used to implement the expression before the simplification and the number of gates used in this lab after the simplification.

$$Original\ function, 3\wedge, 3\vee, 2\,NOT = 8\,TOTAL: B + A.\left[D + C.\left(\overline{A}.B + \overline{C}\right)\right]$$

Simplified, 1 AND, 1 OR, = 2 TOTAL GATES : B + AD

e. Compare the number of ICs used to implement the expression before the simplification (in lab 1) and the number of ICs used in this lab after the simplification.

Original function: 3 ICs (7404-NOT, 7408- AND, 7432- OR)

Simplified : 2 ICs (7408-AND, 7432-OR)

2. Design a logic circuit to produce HIGH output only if the input, represented by a 3-bit binary number, is greater than one and less than six.

a. Build the Truth Table.

A	B	C	F(A,B,C)
0	0	0	0
0	0	1	0
0	1	0	1
0	1	1	1
1	0	0	1
1	0	1	1
1	1	0	0
1	1	1	0

$F(A,B,C) = \overline{A}B\overline{C} + \overline{A}BC + A\overline{B}\overline{C} + A\overline{B}C$

b. Using theorems of Boolean algebra, simplify the equation.

$F(A,B,C) = \overline{A}B\overline{C} + \overline{A}BC + A\overline{B}\overline{C} + A\overline{B}C$

$= \overline{A}B(\overline{C} + C) + A\overline{B}(\overline{C}+C)$

$= \overline{A}B(1) + A\overline{B}(1)$

$= \overline{A}B + A\overline{B}$

$= A \oplus B$

c. Simulate the simplified equation circuit (show the IC pins numbers on your drawing).

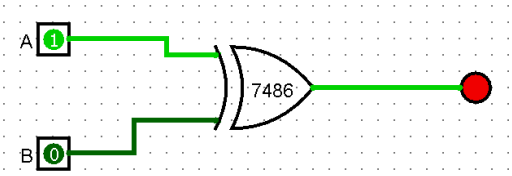

d. Implement the circuit and verify your implementation.

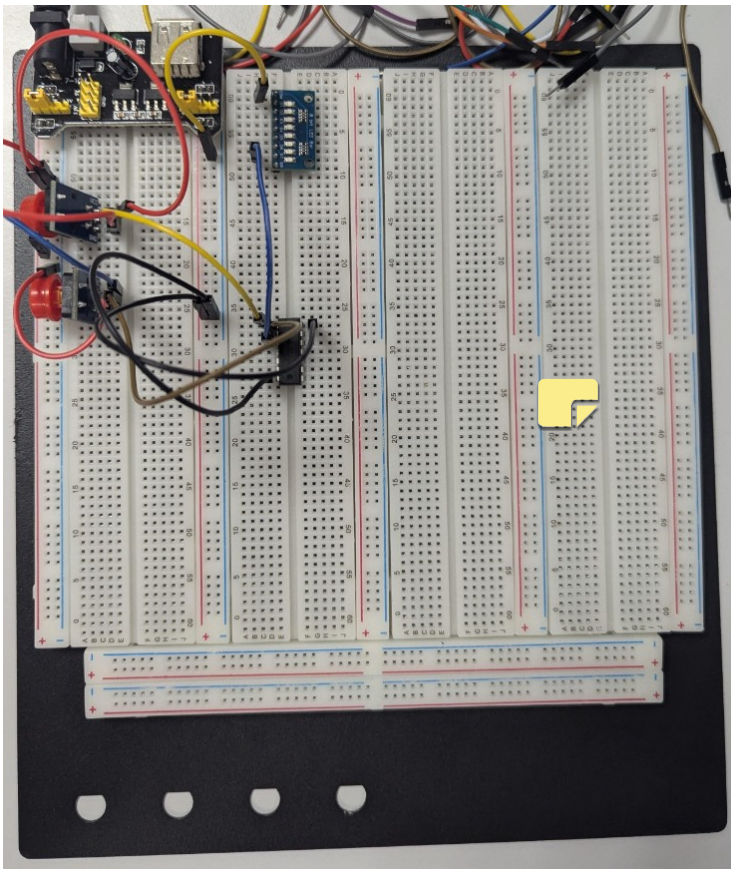

3. Given the following Boolean expression:

$$F = (A+B).(\overline{A}+\overline{B})$$

1. Simulate the circuit using LogiSim, verify its operation by building the truth table.

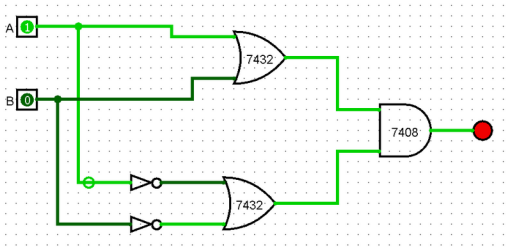

A	B	F(A,B)
0	0	0
0	1	1
1	0	1
1	1	0

2. Convert F to all NOR design, show your design, simulate it, and implement it on the Breadboard.

$$F = (A+B).(\overline{A}+\overline{B})$$

$$= (A+B).'(\overline{A}+\overline{B})$$

$$= \overline{\overline{(A+B)}+\overline{(\overline{A}+\overline{B})}}$$ = NOR (NOR (A,B) , NOR(NOR(A,A), NOR(B,B))

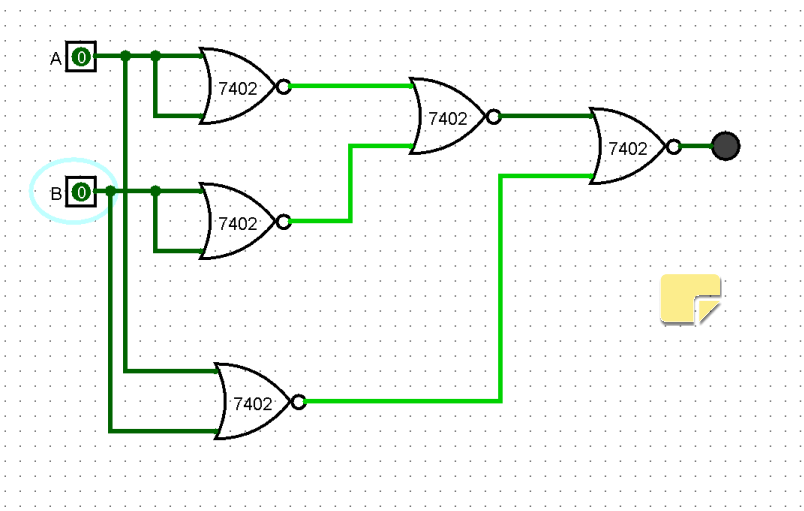

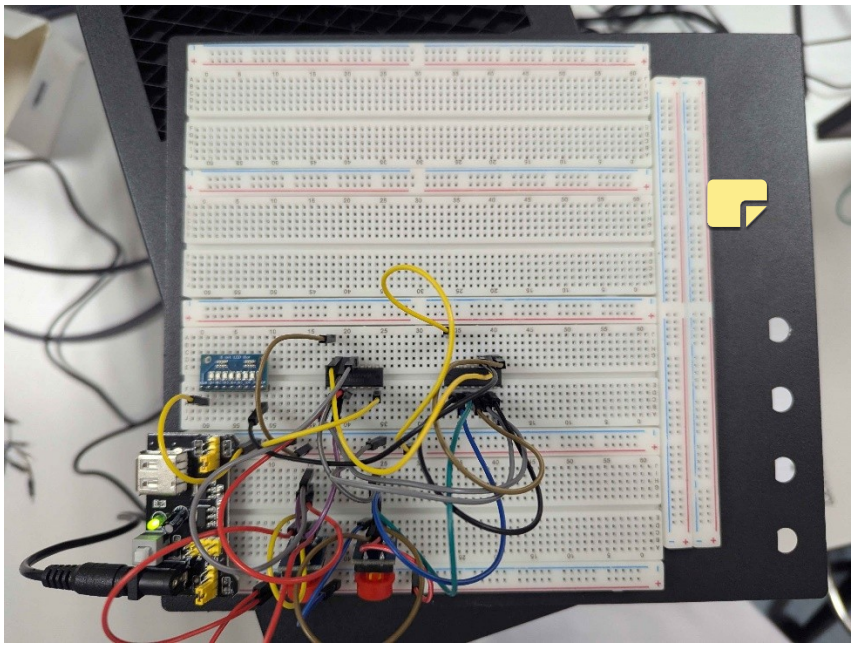

3. Convert F to all NAND design, show your design, simulate it, and implement it on the Breadboard.

$$F=(A+B).(\overline{A}+\overline{B})$$

$$F=\overline{(\overline{A}.\overline{B})}.\overline{(A.B)}$$

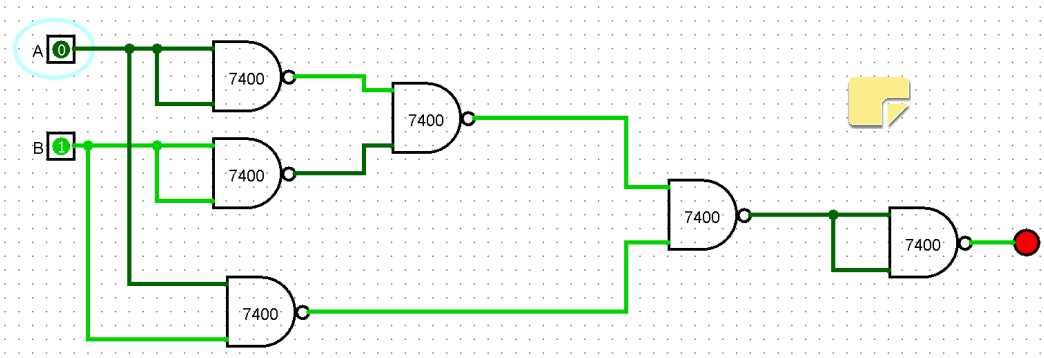

Conclusion

In this lab we practised simplifying Boolean expressions using Boolean Algebra, such that physical logic circuits could be constructed more efficiently using less logic gates and IC circuits. Furthermore, we came up with a Boolean expression to represent a truth table using the Sum of Minterms (SOM) method, and recreated logic gates using only universal NAND and NOR gates.